SSB CRYSTAL FILTERS

TYPE	Carrier frequency Fo MHz	Pass Bandwidth Hz	at dB	Pass band ripple (max) dB	Relative attenuation carrier frequency (min) dB	Stop bandwidth Hz	at dB	Relative attenuation in stop band (min) dB	Minimum transducer attenuation in pass band (max) dB	Group delay distortion (max) µs	at Hz	In band intermodulation distorsion dB	Terminating impedance Ω	Operating temperature range °C	Case dimensions and type mm	
176-10-3.1 6	1.4	-300/-3400	3	1.5	15	-4000/+300 -7000/+300	50 60	50	6	450 850	-800/-3050 -495/-3050		50	-15/+55	76.2x27.9x30.5	10
177-10-3.1 6	1.4	+300/+3400	3	1.5	15	-300/+5000 -450/+7000	50 60	50	6	450 850	+800/+3050 +495/+3050		50	-15/+55	76.2x27.9x30.5	10
189-10-6.8 6	1.4	-300/-3400	3	2	23	-5000/+1000	63	63	6	250 300	-880/-2830 -750/-3000	60	1k || 75pF	-10/+70	76.2x27.9x30.5	10
194-12-2.7 6	1.4	+300/+3000	3	2	20	+3600/-300	63	63	6			60	1k || 75pF	-10/+70	66.5x20.9x20.5	12
195-12-2.7 6	1.4	-300/-3000	3	2	20	+300/-3000	63	63	6			60	1k || 75pF	-10/+70	66.5x20.9x20.5	12
188-10-3.1 6	1.5	-300/-3400	3	2	25	-7000/+450	60	60	5	500	-800/-2800		600	-20/+65	76.2x27.9x30.5	10
155 S1 2.8 6	1.8	-300/-3100	1.5	1.5	25	Fo/-3650 +200/-3800	25 60	60	6	450 950	-600/-2950 -450/-3050		500	-55/+90	88.9x48.26x26.67	S1
C9U	2.5	+300/+6000	3	2	20	-300/+9000	60	60	4				75	+10/+65	86x44x25	S
C9L	2.5	-300/-6000	3	2	20	+300/-9000	60	60	4				75	+10/+65	86x44x25	S
88 R 2.9 6-1	5	-600/-2700 -300/-3200	1.5 3.0	1.5	15	+450/-6700	60	60	6	450	-800/-2700		1k || 12pF	-55/+85	63.5x19.1x13.5	43(R)
175-4-3.5 6	5	-500/-3000 -350/-3000	2.0 7.0	2	16	+1000/-5000	60	60	5	500	-825/-2750	45	50		50.8x40.6x19.8)	4
50 E 3.86	5	+400/+4200	3	2	20	BW=10000	60	60	4				2k || 100pF	-10/+55	36.1x30.5x27.9	43(E)
23 E 36G	5	+300/+3300	6	3	20	-400/+4100 BW=5500	40 60	60	4				1.5k || 100 pF	-25/+70	36.1x30.5x27.9	43(E)
196-2-3.05 6	5.25	+500/+3400 +350/+3400	1.5 2.5	1	15			70	4.5	300	+600/+2750		250		57.45x19.25x24.2	2
P3-SSB	7	+225/+3400	3	0.7	10	-3000/+7000		70	3				910		58x25x15	P3

LOW FREQUENCY CRYSTAL FILTERS

	Center frequency Fo	Pass Bandwidth		Pass band ripple (max)	Stop bandwidth		Relative attenuation in stop band (min)	Minimum transducer attenuation in pass band (max)	Terminating impedance	Operating temperature range	Case dimensions and type	
			at			at						
TYPE	kHz	Hz	dB	dB	Hz	dB	dB	dB	Ω	° C	mm	
7CD14F001	84.080	± 3	3	0.3	± 0.380	40		1.5	1000	20/+70	60x45x15	S001
7CD14F006	100	± 3	3	0.3	± 0.400	40		1.5	1000	20/+70	60x45x15	S001
7CD14F002	104.080	± 3	3	0.3	± 0.380	40		1.5	1000	20/+70	60x45x15	S001
209-14-0.08 10	200	± 40 ± 80	0.3 3	0.3	± 0.270 ± 0.480 ± 1.100	40 60 100	100	4	50	+20/+50	76x80x23	14
210-15-1.8 10	200	± 500 ± 900	0.3 3	0.3	± 2.2 ± 3.0 ± 4.5	40 60 100	100	4	50	+20/+50	120x100x23	15
211-15-0.8-10	200	± 200 ± 400	0.3 3	0.3	± 1.1 ± 4.0	40 100	100	4	50	+20/+50	120x100x23	15
212-16-5 6	250	± 2500	3	3	± 5 ± 6	40 60	60	6	1000	-25/+75	89.5x26.5x28.5	16
7CD14F003	411.920	± 3	3	0.3	± 0.38	40		2	1k/10k	-20/+70		1
150 W 0.76	448.730	± 550	2	2	± 2	60	60	6	5k || 100pF	-20/+55	67x17.5x20	W
148 W 0.25 5	448.875	± 250	2	1	± 1.6	50	50	6	5k || 50pF	-20/+55	67x17.5x20	W
152 W 5 6	450 ?	± 3000	3	2	± 10	60	60	6	5k || 470pF	-20/+55	67x17.5x20	W
213-17-0.17 8	450	±50 to ±100 ±85 to ±110	1.5 6	1.5	± 0.22 ± 2	40 80		5	500|| 30pF	-10/+50	66x34x23.5	17
214-18-3.2 6	455	± 1600	3	2	± 3	60	60	5.5	5k || 50pF	-10/+70	75x25.8x28.7	18
136 J 0.25 6	455	± 125	3	1	± 0.75	60	60	6	1000	-25/+55	38x19x15.9	37(J)
7CD14F004	547.92	± 3	3	0.3	± 0.38	40		2	1k/10k	-20/+70	60x45x15	1

1 - 5 MHz CRYSTAL FILTERS

	Center frequency Fo	Pass Bandwidth		Pass band ripple (max)	Stop bandwidth		Relative attenuation in stop band (min)	Minimum transducer attenuation in pass band (max)	Group delay distortion (max)		In band intermodulation distorsion	Terminating impedance	Operating temperature range	Case dimensions and type	
			at			at				at					
TYPE	MHz	kHz	dB	dB	kHz	dB	dB	dB	µs	Hz	dB	Ω	°C	mm	
215-180.46	1.398	± 0.2	3	1	±1.2	60	60	5				1k ‖75pF	10/+55	75x25.8x28.7	(18)
190S1-5.75	1.4	± 2.858	1	1	±3.427 ±3.642	43 53	53	6	200 450 1000	±2000 ±2450 ±2858	60	1k ‖75pF	0/+60	88.9x48.26x26.67	(S1)
191-12-1 6	1.4	± 0.5	3	2	±2.25	63	63	6				1k ‖75pF	10/+70	66.5x20.9x20.5	(12)
192-12-6 6	1.4	± 3	3	2	±5.5	63	63	6			60	1k ‖75pF	10/+70	66.5x20.9x20.5	(12)
193-12 0.36	1.4	± 0.15	3	2	±1	63	63	6				1k ‖75pF	10/+70	66.5x20.9x20.5	(12)
C1	2.5	± 0.1	6	2	±0.5	60		8.5				75	+10/+65	57.5x24.5x22.5	36(G)
C2	2.5	± 0.2	3	2	±1.25	60		5				75	+10/+65	57.5x24.5x22.5	36(G)
C31	2.5	± 0.6	3	3	±1.5	60		4				75	+10/+65	68x35x26	(M)
C41	2.5	± 1.2	3	3	±2.15	60		3				75	+10/+65	86x44x25	(S)
C5	2.5	± 2	3	3	±8.5	60		3.5				75	+10/+65	57.5x24.5x22.5	36(G)
C6	2.5	± 3	3	3	±9.5	60		5				75	+10/+65	68x35x26	(M)
7CDA3F002	4	2	3	0.5	30	40		2				50	-20/+70	40x20x12	S013
22 E 6 6	5	± 3	6	3	±7.75	60		4				1.5k‖100pF	-25/+70	36.5x27.3x19.5	34(E)
87 R 6 6-1	5	± 2 ± 2.75	1.5 4.5	1.5	±11.5	60	60	6				1k ‖ 12pF	-40/+85	63.5x19.1x13.5	43(R)
106 R 6 6	5	± 3	6	1	± 13	80		3				50	-40/+70	63.5x19.1x13.5	43(R)
182 PA 0.26	5	± 0.1	3	1	± 1.1	60	60	4				50	0/+75	32x20x13.5	40(PA)
20 E 0.46	5	± 0.2	6	3	± 1.1	60		4				50 ‖100pF	-25/+70	36.5x27.3x19.5	34(E)
21 E 0.86	5	± 0.4	6	3	± 2.2	60		4				50 ‖100pF	-25/+70	36.5x27.3x19.5	34(E)

10.7 MHz CRYSTAL FILTERS

	Center frequency Fo	Pass Bandwidth		Pass band ripple (max)	Stop bandwidth		Relative attenuation in stop band (min)	Group delay distorsion (max)		Minimum transducer attenuation in pass band (max)	Terminating impedance	Operating temperature range	Case dimensions and type	
			at			at			at					
TYPE	MHz	kHz	dB	dB	Hz	dB	dB	µs	kHz	dB	Ω	C	mm	
31 E 2.4 8	10.7	± 1.2	6	2	± 3.5	80	80			4	250 || 25pF	-25/+70	36x26.8x19	34(E)
85 L 240 6	10.7	± 120	3	2	± 400	50	50			9	50	-10/+70	57x24x22	36(L)
94 L 80 6	10.7	± 40	3	2	± 160	60	60			9	910 || 25pF	-10/+70	57x24x22	36(L)
167 F 40 8	10.7	± 20	3	2	± 80 ± 100	60 80	80			6	1500 || 25pF	-30/+80	58x17.2x13.5	35(F)
M108PA248	10.7	± 12	3		± 25 ± 50	40 70	70	90 30	± 12 ± 9	4	50 1500 || 25pF	-40/+80	32x20x13.5	40(PA)
M109PA215	10.7	± 10.5	3		± 25 ± 40	30 50	50	40 25	± 10.5 ± 8	4	50 1500 || 25pF	-40/+80	32x20x13.5	40(PA)
M112PA248	10.7	± 12	3		± 25 ± 35	60 80	60	130 40	± 12 ± 9	4	1500 || 25pF	-40/+80	32x20x13.5	40(PA)
197-5-60 7	10.7	± 30	3	1.5	± 200	70	70	1	± 30	10	1000	-20/+70	55.3x20x23.2	(5)
7CD15F012	10.7	± 12.5	3	0.3	± 40	40				2	50	-20/+70	36x27x19	S003
7CD25F040	10.7	± 8.5	3	1	± 25	40				2.5	50	-20/+70	36x27x19	S003
7CD25F041	10.7	± 19	3	1	± 60	40				2.5	50	-20/+70	36x27x19	S003
7CD25F042	10.7	± 27	3	1	± 80	40				2.5	50	-20/+70	36x27x19	S003
7CD25F043	10.7	± 35	3	1	± 105	40				2.5	50	-20/+70	36x27x19	S003
7CD25F044	10.7	± 43	3	1	± 130	40				3	50	-20/+70	36x27x19	S003
7CD25F045	10.7	± 51	3	1	± 155	40				3.5	50	-20/+70	36x27x19	S003

For detailed characteristics please see individual data sheets.
Other characteristics available on request.
M = Monolithic filter design

10.7 MHz CRYSTAL FILTERS

TYPE	Center frequency Fo	Pass Bandwidth		Pass band ripple (max)	Stop bandwidth		Relative attenuation in stop band (min)	Group delay distorsion (max)		Minimum transducer attenuation in pass band (max)	Terminating impedance	Operating temperature range	Case dimensions and type	
			at			at			at					
	MHz	kHz	dB	dB	Hz	dB	dB	µs	kHz	dB	Ω	C	mm	
MO2 PA (PB) 309	10.7	±15	3	3	±35 ±50	70 90	4			4	1500||25	-25/+70	32x20x13.5	40(PA) 41(PB)
MO3 PA 307	10.7	±15	6	2	±50	70	2			2	910||50	-25/+55	32x20x13.5	40(PA)
MO5 PA 305	10.7	±15	6	1.5	±50	50	1.5			1.5	910||50	-25/+55	32x20x13.5	40(PA)
M51 PA (PB) 309	10.7	±15	3	3	±35 ±50	70 90	4			4	1500||20	-40/+80	32x20x13.5	40(PA) 41(PB)
MO7 PA (PB) 159	10.7	±7.5	3	3	±17.5 ±25	70 90	4			4	1500||20	-25/+70	32x20x13.5	40(PA) 41(PB)
MO8 PA 157	10.7	±7.5	3	2	±25	70	3			3	910||50	-25/+55	32x20x13.5	40(PA)
M 10 PA 155	10.7	±7.5	3	2	±25	50	3			3	910||50	-25/+55	32x20x13.5	40(PA)
M 18 PB 208	10.7	±10	3	2	±25	80	4			4	1500||25	-40/+80	32x20x13.5	41(PB)
M54 PA (PB) 159	10.7	±7.5	3	3	±17.5 ±25	70 90	4			4	1500||20	-40/+80	32x20x13.5	40(PA) 41(PB)
M 59 B 156	10.7	±7.5	3	2	±25	65	3			3	4700	-40/+80	15x12x15	32(B)
M 104 PA 157	10.7	±7.5	3	2	±25	70	4			4	50	-40/+80	32x20x13.5	40(PA)
M 105 PA 159	10.7	±7.5	3	3	±17.5 ±25	70 90	4			4	50	-40/+80	32x20x13.5	40(PA)
MF - 5	10.7	±7.5	3	2	±25	40	2.5			2.5	4700||2	-25/+70	15x12x15	32(B)
17 E 79	10.7	±3.5	3	2	±12.5	90	4			4	680||25	-25/+70	36x26.8x19	34(E)
19 E 76	10.7	±3.5	3	2	±11.5	60	4			4	680||25	-25/+70	36x26.8x19	34(E)

For detailed characteristics please see individual data sheets.
Other characteristics available on request.
M = Monolithic filter design

21.4 MHz FILTERS

TYPE	Center frequency Fo	Pass bandwidth	at	Pass band ripple (max)	Stop bandwidth	at	Relative attenuation in stop band	Minimum transducer attenuation in pass band (max)	Terminating impedance	Operating temperature range	Case dimensions and type	
	MHz	kHz	dB	dB	kHz	dB	dB	dB	Ω	C	mm	
58A L 110 6	21.4	± 55	3	2	± 220	60	60	6	470 || 25pF	-10/+70	57x24x22	36(L)
95 L 30 6	21.4	± 150	3	2	± 600	50	50	9	470 || 25pF	-10/+70	57x24x22	36(L)
200-6-10 6	21.4	± 5	3	2	± 11	60	60	4	50	-20/+70	38x18x16	(6)
210-6-50 6	21.4	± 25	3	2	± 55	60	60	4	50	-20/+70	38x18x16	(6)
MF-8	21.4	± 5.5	3		± 12.5	60	60	4	1500 || 2pF	-25/+70	13.4x8.5x11	44(V)
217-A-30-4	21.4	±15	1.5	1	±75	45	45	3	50	-10/+80	24.8x13.8x10.3	31(A)
7CD15F014	21.5	± 7.5	3	1	± 22.5	40		2.5	50	-20/+70	36x27x19	S003
203-11-20 8	21.6	± 10	6	2	± 25	80	80	4	1800 || 12pF	-40/+80	30x19x13	(6)
M 92 A 308	21.4	±15	3	2	±35 ±50	65 90	90	4	470||15pF	-25/+70	24.8x13.8x10.3	31(A)
M118 A 308	21.4	±15	3	2	±35 ±50	65 80	80	3	50	-25/+70	24.8x13.8x10.3	31(A)
M127 A 309	21.4	±15	3	1	±35 ±50	65 85	80	3	50	-40/+80	24.8x13.8x10.3	31(A)

For detailed characteristics please see individual data sheets.
Other characteristics available on request.
M = Monolithic filter design

21.4 MHz FILTERS

	Center frequency Fo	Pass bandwidth		Pass band ripple (max)	Stop bandwidth		Relative attenuation in stop band	Minimum transducer attenuation in pass band (max)	Terminating impedance	Operating temperature range	Case dimensions and type	
			at			at						
TYPE	MHz	kHz	dB	dB	kHz	dB	dB	dB	Ω	C	mm	
MF-2	21.4	±7.5	3	2	±17.5 ±25	65 90	90	3	1500||2pF	-25/+70	13.4x8.5x11	44(V)
MF-3	21.4	±6	3	1	±20	40	40	2	1200||2.5pF	-25/+70		N
MF-4	21.4	±7.5	3	2	±17.5 ±25	40 60	60	2.5	1500||2pF	-25/+70	13.4x8.5x11	44(V)
MF21.4	21.4	±7.5	3	2	±25	60	60	3	1000||10pF	-30/+55	24.8x13.8x10.3	31(A)
M53 PA 159	21.4	±7.5	3	2	±17.5 ±25	65 90	90	4	470||20pF	-25/+70	32x20x13.5	40(PA)
M93 A 159	21.4	±7.5	3	2	±17.5 ±25	65 90	90	4	470||15pF	-40/+80	24.8x13.8x10.3	31(A)
M103 A 159	21.4	±7.5	3	2	±17.5 ±25	65 90	90	5	50	-40/+80	24.8x13.8x10.3	31(A)
M114 D 158	21.4	±7.5	3	2	±17 ±22	60 80	80	5	1600	-40/+80	44.3x5.6x17.3	33(D)
M117 A 159	21.4	±7.5	3	1	±17.5 ±25	65 90	90	3	50	-40/+80	24.8x13.8x10.3	31(A)
M121 A 158	21.4	±7.5	3	2	±17.5	65			50/470||15pF	-40/+80	24.8x13.8x10.3	31(A)
M137 A 79	21.4	±3.5	3	2	±9	65			50	-25/+70	24.8x13.8x10.3	31(A)
M138 A 7.59	21.4	±3.75	3	2	±9	65			470||15	-25/+70	24.8x13.8x10.3	31(A)

For detailed characteristics please see individual data sheets.
Other characteristics available on request.
M = Monolithic filter design

LINEAR PHASE CRYSTAL FILTERS

	Center frequency Fo	Pass Bandwidth		Stop bandwidth		Group delay distorsion (max)		Minimum transducer attenuation in pass band (max)	Terminating impedance	Operating temperature range	Case dimensions and type	
			at		at		at					
TYPE	MHz	kHz	dB	kHz	dB	µs	kHz	dB	Ω	C	mm	
G1	10.7	± 12	6	± 50	60	20	± 10	3	470 || 25pF	-20/+70	58x17.2x13.5	35(F)
B1	21.4	± 10	3	± 70	60	3	± 10	4	50	-20/+70	37.8x17.8x15.9	46(Z)
B2	21.4	± 15	3	± 120	60	3	± 15	4	500 || 10pF	-20/+70	58x17.2x13.5	35(F)
G3	21.4	± 10	3	± 80	60	5	± 10	5	50	-10/+55	37.8x17.8x15.9	46(Z)
G3C-2	21.4	± 7	3	± 65	70	5	± 7	3.5	50	-10/+55	37.8x17.8x15.9	46(Z)
P1	21.4	± 16	3	± 50 ± 85	45 90	15	± 16	3	50	-40/+80	58x17.2x13.5	35(F)
202-9-36 7	21.4	± 18	6	± 55 ± 75	60 70	8 15	± 12 ± 15	5	50	-40/+85	30x19x13	(9)

SELECTIVE LINEAR PHASE CRYSTAL FILTERS

	Center frequency Fo	Pass Bandwidth		Stop bandwidth		Group delay distorsion (max)		Minimum transducer attenuation in pass band (max)	Terminating impedance	Operating temperature range	Case dimensions and type	
			at		at		at					
TYPE	MHz	kHz	dB	kHz	dB	µs	kHz	dB	Ω	C	mm	
M7 SLF 208	10.7	± 10	6	± 25 ± 50	60 80	30 20	± 10 ± 9	2	1500 || 25pF	-40/+80	32x20x13.5	40(PA)
M8 SLF 208	10.7	± 10	6	± 25 ± 50	60 80	30 20	± 10 ± 9	2	50	-40/+80	32x20x13.5	40(PA)
M9 SLF 208	10.7	± 12	6	± 25 ± 50	50 80	40 30	± 10 ± 9	2	1500 || 25pF	-40/+80	32x20x13.5	40(PA)
184-7-189	14.5	± 9	3	± 24 ± 47	45 80	30	± 10	3.5	50	-55/+85	58x17.2x13.5 32x20x13.5 40x20x11	35(F) 40(PA) (7)
199-F-168	21.4	± 8	3	± 27 ± 40	60 80	20	± 6.4	3	50	-40/+85	58x17.2x13.5	35(F)
3 SLF 158	21.4	± 8.5	6	± 25 ± 50	50 90	15	± 8.5	3.5	910 || 15pF	-25/+60	37.8x17.8x15.9	46(Z)
5 SLF 158	21.4	± 10 ± 16	3 6	± 25 ± 50	20 70	20 15	± 16 ± 10	3	50	-25/+70	37.8x17.8x15.9	46(Z)
M1 SLF 156	21.4	± 18	6	± 55	60	8	± 12	5	50	-40/+85	24.8x13.8x10.3	31(A)

For detailed characteristics please see individual data sheets.
Other characteristics available on request.
M = Monolithic filter design

VHF CRYSTAL FILTERS

	Center frequency Fo	Pass bandwidth		Pass band ripple (max)	Stop bandwidth		Relative attenuation in stop band (min)	Minimum transducer attenuation in pass band (max)	Spurious attenuation	Group delay distorsion (max)		In band intermodulation distorsion	Out band intermodulation distorsion	Terminating impedance	Operating temperature range	Case dimensions and type	
			at			at					at						
TYPE	MHz	kHz	dB	dB	kHz	dB	dB	dB	dB	µs	kHz	dB	dB	Ω	°C	mm	
187-8-6.8 6	30	± 3.4	0.5	0.5			60	3		30	±0.8/ ±3.15	63	72	50	0/+70	61.2x26.2x26.2	(8)
7AT35M011	31.354	± 16.51	3	0.5	± 226	40		3						2200	-20/+70	19.2x6.2	S021
7CDB1F002	31.354	± 17	3	0.5	± 225	40		2.5						200	-20/+70	25x16x12	S004
7AT35M003	34.368	± 18.55	3	0.5	± 245.48	40		3						2200	-20/+70	19.2x6.2	S021
7CDB1F001	35.840	± 17.5	3	0.5	± 200	40		3						200	-20/+70	25x16x12	S004
7CDB1F003	37.7084	± 20	3	1	± 270	40		2.5						200	-20/+70	25x16x12	S004
7CDA3F004	40	± 3	3	0.5	± 40	40		4						50	-20/+70	25x16x12	S004
186-Z-12 6	40.032	± 6	1	0.5	± 20 ± 58	30 60	60	2	60 (±80kHz) 30 (±2.5Mz)	20 50	± 4 ± 6		88	50	-10/+80	37.8x17.8x15.9	46(Z)
172-L1-16 6	40.455	± 8	3	2	± 40	60	60	3	40					Rs=50 Rl=450	-10/+70	57.5x24.3x15	(L1)
161-1-12 6	41.4	± 6	3	1	± 30	60	60	3	40			60	82	50	-10/+80	60.7x26.5x19.2	(1)
170-2-100 6	41.4	± 50	3	2	± 65 ± 90	30 60	60	4	50			60	82	50	-10/+55	60.7x26.5x19.2 with BNC	(2)
60 F 15 6-1	50	± 7.5	3	2	± 17.5 ± 25	40 60	60	4						50	-40/+80	58x17.2x13.5	35(F)
168 F 40 6	50	± 20	3	2	± 100	60	60	5		15	± 20			50	-30/+80	58x17.2x13.5	35(F)
204 Z 10 5	70	± 5	3	1	± 25	30	50	3	30					50	-25/+70	37.8x17.8x15.9	46(Z)
E2	72.2	± 15	3		± 90	40	60	6		1	± 12			50	-10/+80	58x17.2x13.5	35(F)
205 F 20 8	75	± 10	3	2	± 50	80	80	5.5	70					50	-40/+90	58x17.2x13.5	35(F)

VHF CRYSTAL FILTERS

TYPE	Center frequency Fo	Pass bandwidth		Pass band ripple (max)	Stop bandwidth		Relative attenuation in stop band (min)	Minimum transducer attenuation in pass band (max)	Spurious attenuation	Group delay distorsion (max)		In band intermodulation distorsion	Out band intermodulation distorsion	Terminating impedance	Operating temperature range	Case dimensions and type	
			at			at					at						
	MHz	kHz	dB	dB	kHz	dB	dB	dB	dB	µs	kHz	dB	dB	Ω	°C	mm	
171-3-10 5	75	± 5	3	2	± 75	50	50	5	30 (+75kHz/ +150kHz) 50 (+150kHz/ +100MHz)					50	-50/+85	23.62x12.95x19.5	(3)
206-F-3 8	75.4995	± 1.5	3	2	± 15 ± 20 ± 80	50 60 80	80	6	50					50	-40/+90	58x17.2x13.5	35(F)
207-Z2-8 6	80	± 4	1	1	- 35 +35	40 30	60	3	40 20 Fund. 15 Overtones	40	± 4	45 65	68	50	-40/+85	38.4x18.2x12.2	(Z2)
166-1-12 6	81.4	± 6	3	1	± 30	60	60	4	40			65	82	50	-10/+80	60.7x26.5x19.2	(1)
169-1-40 6	81.4	± 20	3	2	± 100	60	60	4						50	-10/+55	60.7x26.5x19.2	(1)
154 F2 15 6	97.8	± 3.2	0.6	1	± 25 ± 50	20 50	60	4.5	50	50	± 3.2	60		100	-55/+90	57.15x19.5x15.24	17(F2)
156 Q112 6	99	± 3.1 ± 6	0.5 3	0.5	± 44 ±100/±500	40 60	60	4	35	20	± 3.1	70	75	100	0/+75	49.63x15.08x15.24	42(Q)
173 Z1 10 4	100	± 5	3	3	± 25	40	40	5	40	5	± 2			50	-20/+70	37.8x17.8x14.8	(Z1)
178 F 15 8	100.2	± 7.5	3	2	± 25 ± 30	60 80	80	6	60					50	-20/+70	58x17.2x13.5	35(F)
135 Q 15 6	109.35	± 3 ± 7.5	0.5 3		± 25 ± 75	20 60	60	6	40			50		200	-25/+55	49.63x15.08x15.24	42(Q)

VHF CRYSTAL FILTERS

	Center frequency Fo	Pass bandwidth		Pass band ripple (max)	Stop bandwidth		Relative attenuation in stop band (min)	Minimum transducer attenuation in pass band (max)	Spurious attenuation	Group delay distorsion (max)		In band intermodulation distorsion	Out band intermodulation distorsion	Terminating impedance	Operating temperature range	Case dimensions and type	
			at			at					at						
TYPE	MHz	kHz	dB	dB	kHz	dB	dB	dB	dB	µs	kHz	dB	dB	Ω	°C	mm	
165 K1 10 5	109.35	± 5	1		± 45	50	55	6	40 (75 to 145 MHz) 15 (5 to75 & 145 to 200 MHz)			50		200	-40/+85	35.6x12x11.5 49.6x15x12.4	38(K)
89 K 14 6-1	115	± 3.2 ± 7	0.6 3	0.6	± 85	60	60	6	40			45		200	-40/+85	35.6x12x11.5	47(K1)
208-13-20 7	144.456	± 10	0.5	0.5	100	35	40	6	30 20 (7th OT)			60	75	50	-40/+85	34.54x16x16.51	38(K)
7CD15F005	30	± 10	3	1	± 30	40		4						535 ‖15pF	-20/+70	36x27x19	(13)
7CD15F015	30	± 7.5	3	1	± 22.5	40		3						50	-20/+70	36x27x19	S003
7CD15F008	30	± 85	3	1	± 115	40		5						6800 ‖12pF	-20/+70	36x27x19	S003
7CD25F003	30	± 70	3	1	± 300	40		4						7000 ‖12pF	-20/+70	36x27x19	S003
7CD25F006	30	± 30	3	1	± 150	40		4						2200 ‖12pF	-20/+70	36x27x19	S003
7CD25F046	30	± 8.5	3	1	± 25	40		3						535	-20/+70	36x27x19	S003
7CD25F047	30	± 19	3	1	± 60	40		3						535	-20/+70	36x27x19	S003
7CD25F048	30	± 27	3	1	± 80	40		3						535	-20/+70	36x27x19	S003
7CD25F049	30	± 35	3	1	± 105	40		3.5						535	-20/+70	36x27x19	S003

VHF CRYSTAL FILTERS

	Center frequency Fo	Pass bandwidth		Pass band ripple (max)	Stop bandwidth		Relative attenuation in stop band (min)	Minimum transducer attenuation in pass band (max)	Spurious attenuation	Group delay distorsion (max)		In band intermodulation distorsion	Out band intermodulation distorsion	Terminating impedance	Operating temperature range	Case dimensions and type	
			at			at					at						
TYPE	MHz	kHz	dB	dB	kHz	dB	dB	dB	dB	µs	kHz	dB	dB	Ω	° C	mm	
7CD25F050	30	± 43	3	1	± 130	40		4.5						535	-20/+70	36x27x19	S003
7CD25F051	30	± 51	3	1	± 150	40		6						535	-20/+70	36x27x19	S003
7CD25F052	30	± 8.5	3	1	± 25	40		2.5						75	-20/+70	36x27x19	S003
7CD25F053	30	± 19	3	1	± 60	40		3						75	-20/+70	36x27x19	S003
7CD25F054	30	± 35	3	1	± 105	40		3.5						75	-20/+70	36x27x19	S003
7CD25F055	30	± 43	3	1.5	± 130	40		4.5						75	-20/+70	36x27x19	S003
7CD25F056	30	± 51	3	1.5	± 150	40		6						75	-20/+70	36x27x19	S003
7CD25F057	30	± 10	3	1	± 30	40		2.5						75	-20/+70	36x27x19	S003
7CD25F058	30	± 11	3	1	± 30	40		2.5						75	-20/+70	36x27x19	S003
7CD25F059	30	± 12	3	1	± 35	40		2.5						75	-20/+70	36x27x19	S003
7CD25F060	30	± 13	3	1	± 40	40		2.5						75	-20/+70	36x27x19	S003
7CD25F061	30	± 14	3	1	± 40	40		2.5						75	-20/+70	36x27x19	S003
7CD25F062	30	± 15	3	1	± 45	40		3						75	-20/+70	36x27x19	S003
7CD25F063	30	± 19	3	1	± 60	40		2.5						2200	-20/+70	36x27x19	S003
7CD25F064	30	± 27	3	1	± 90	40		2.5						2200	-20/+70	36x27x19	S003
7CD25F065	30	± 35	3	1	± 105	40		4.5						2200	-20/+70	36x27x19	S003
7CD25F066	30	± 13.5	3	1	± 40	40		3						535	-20/+70	36x27x19	S003
7CD25F067	30	± 12.5	3	1	± 40	40		2.5						75	-20/+70	36x27x19	S003
7CD25F070	30	± 8.5	3	1	± 25	40		4						535	-20/+70	36x27x19	S003
7CD25F071	30	± 25	3	1	± 75	40		4						1300 ||12pF	-20/+70	36x27x19	S003

ANTENNNA (FRONT-END) CRYSTAL FILTERS

	Center frequency Fo	Pass Bandwidth		Pass band ripple (max)	Stop bandwidth		Relative attenuation in stop band (min)		Minimum transducer attenuation in pass band (max)	Terminating impedance	Operating temperature range	Case dimensions and type	
			at			at							
TYPE	MHz	kHz	dB	dB	kHz	dB	dB		dB	Ω	° C	mm	
AT - 1	40-90	± 7	3	1	± 50	40	45	±350	3	50	-25/+70	57x24x22 35.6x12x11.5 32x20x13.5	39(L-BNC) (K1) 40(PA)
AT - 2	90-180	± 7	3	1	± 25 ± 85	20 50	50	±350	6	50	-25/+70	57x24x22 35.6x12x11.5 32x20x13.5	39(L-BNC) (K1) 40(PA)

For detailed characteristics please see individual data sheets.
Other characteristics available on request.

MISCELLANEOUS AND MONOLITHIC CRYSTAL FILTERS

TYPE	Center frequency Fo	Pass Bandwidth	at	Pass band ripple (max)	Stop bandwidth	at	Relative attenuation in stop band (min)	Minimum transducer attenuation in pass band (max)	Terminating impedance	Operating temperature range	Case dimensions and type	
	MHz	kHz	dB	dB	kHz	dB	dB	dB	Ω	° C	mm	
P2-AM	7	± 1.1	3	2.5	± 3	60	60	6	1000||10pF	-50/+85	7.5x24.3x15	(L1)
OM 5 E 68	5 - 8	± 3	6	3	± 12	80	80	4	50 || 25pF	-25/+70	36x26.8x19	34(E)
7CDA3F001	8.448	± 4	3	0.5	± 47	40		3	3700||10pF	-20/+70	40x20x12	S013
7AT38M001	8.448	± 4.735	3	0.5	± 1.34	40		3	3300	-20/+70	ϕ15.3x6.6	S020
7AT38M002	8.592	± 4.638	3	0.5	±61.37	40		3	3300	-20/+70	ϕ15.3x6.6	S020
125 E 166	9.450	± 8	3	2	± 25	60	60	2	2700||25pF	-30/+60	36x26.8x19	34(E)
116 E 0.26	10	± 0.1	1	0	± 1.7	60	60	2	50	+15/+55	36x26.8x19	34(E)
7CD15F072	10	± 14	3	0.3	± 45	40		2.5	50	-20/+70	36x27x19	S003
7CDA3F003	10	± 2.5	3	0.5	± 35	40		2	50	-20/+70	40x20x12	S013
M 52PA159	11.5	± 7.5	6	1.5	± 15 ± 20	60 80	60 80	3	820 ||20pF	-20/+60	32x20x13.5	40(PA)
7AT35M007	12.376	± 6.68	3	0.5	± 89	40		3	2200	-20/+70	ϕ9.2x6.2	S021
7AT35M008	15.767	± 8.51	3	0.5	± 115	40		3	2200	-20/+70	ϕ9.2x6.2	S021
7AT35M001	17.152	± 9.213	3	0.5	±122.51	40		3	2200	-20/+70	ϕ9.2x6.2	S021
7AT35M005	17.920	± 11.5	3	0.5	± 128	40		3	2200	-20/+70	ϕ9.2x6.2	S021
7AT35M009	18.854	± 9.82	3	0.5	± 135	40		3	2200	-20/+70	ϕ9.2x6.2	S021
7CD25F069	20	± 18	3	0.3	± 60	40		2	50	-20/+70	36x27x19	S003
198 F 257	20	± 12.5	3		± 27.5	55	55	3.5	50	-40/+85	58x17.2x13.5	35(F)
7AT35M006	23.651	± 12.318	3	0.5	± 170	40		3	2200	-20/+70	ϕ9.2x6.2	S021
7AT35M010	24.752	± 12.892	3	0.5	± 180	40		3	2200	-20/+70	ϕ9.2x6.2	S021

7ATXXMXXX are monolithic type filters
For detailed characteristics please see individual data sheets.
Other characteristics available on request.

CRYSTAL FILTERS OUTLINES

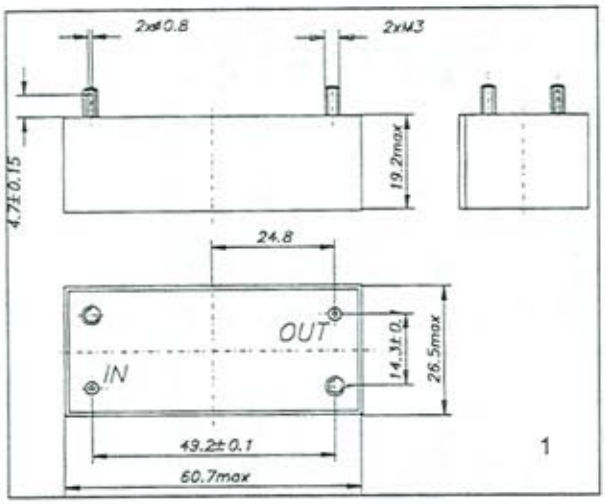

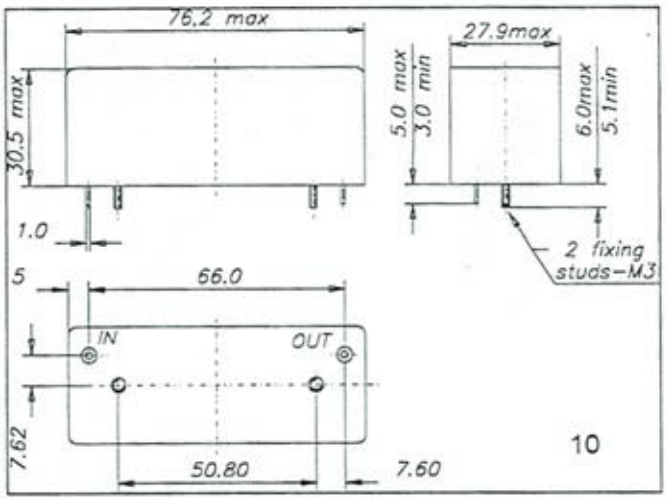

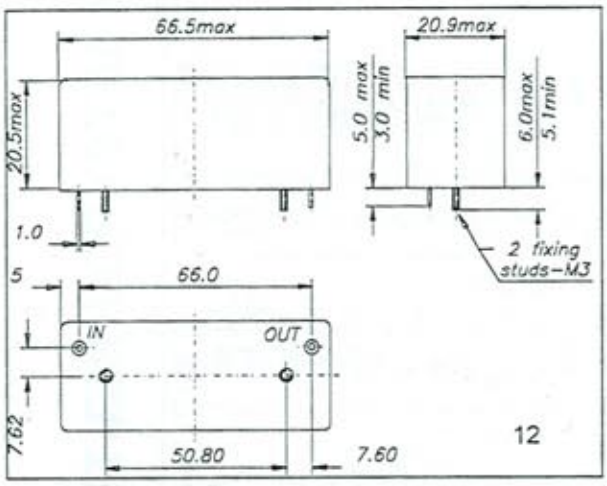

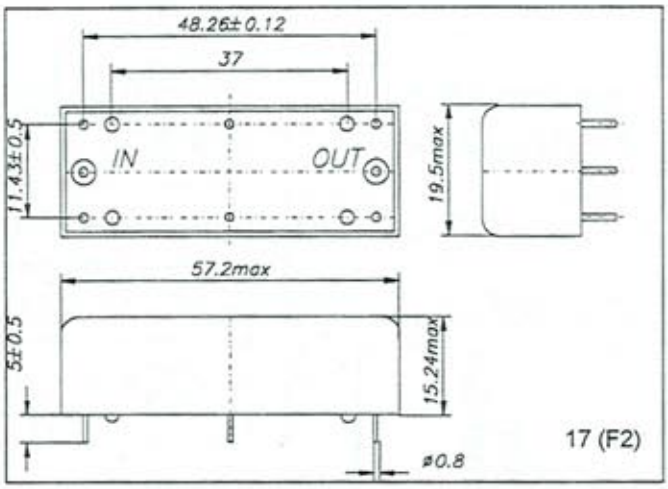

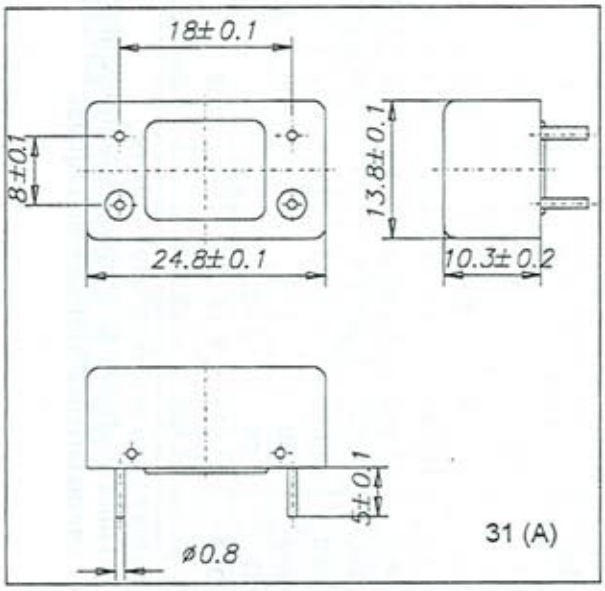

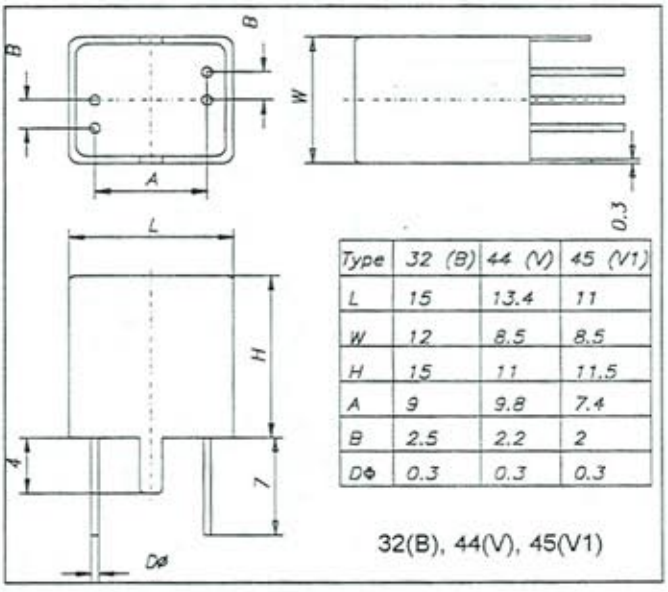

Type	32 (B)	44 (V)	45 (V1)
L	15	13.4	11
W	12	8.5	8.5
H	15	11	11.5
A	9	9.8	7.4
B	2.5	2.2	2
Dø	0.3	0.3	0.3

CRYSTAL FILTERS OUTLINES

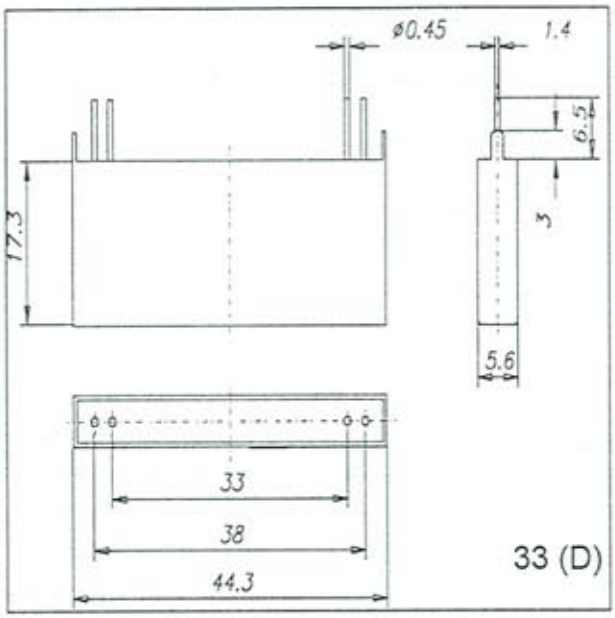

33 (D)

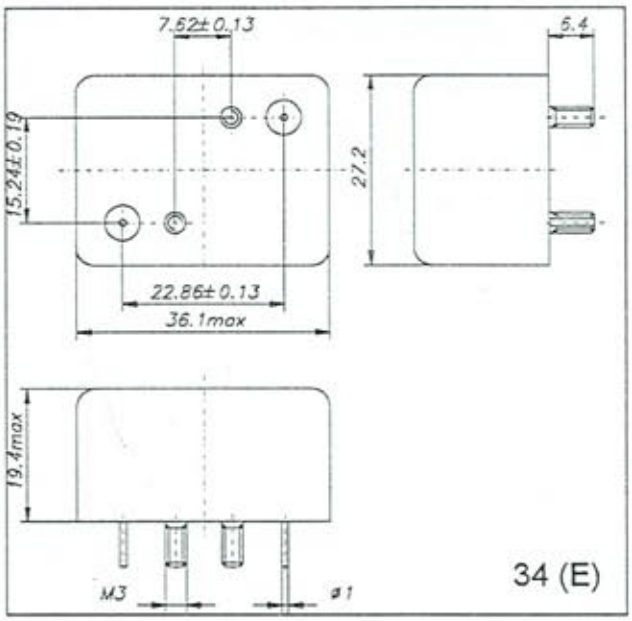

34 (E)

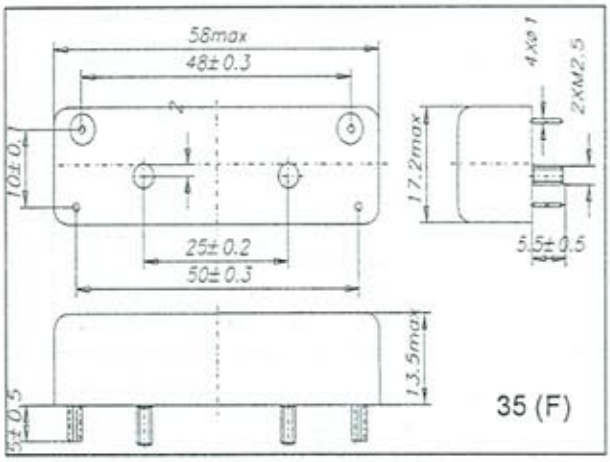

35 (F)

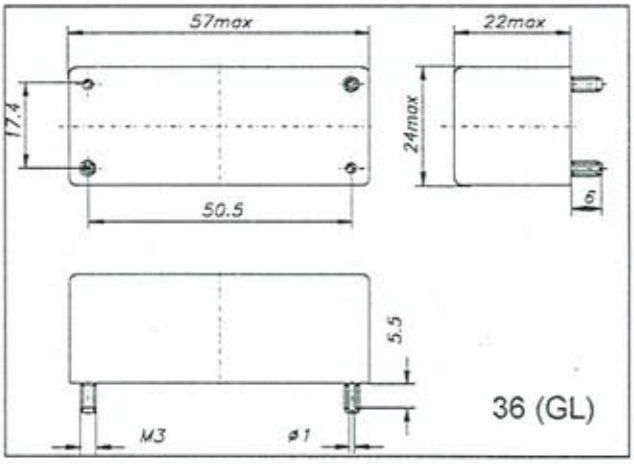

36 (GL)

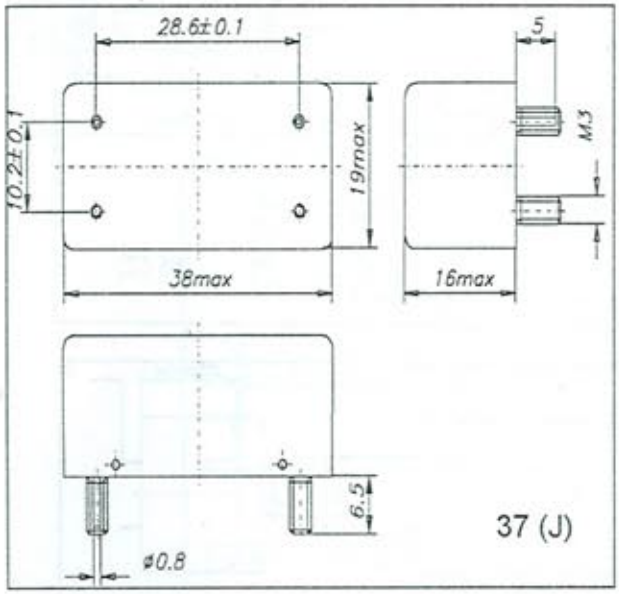

37 (J)

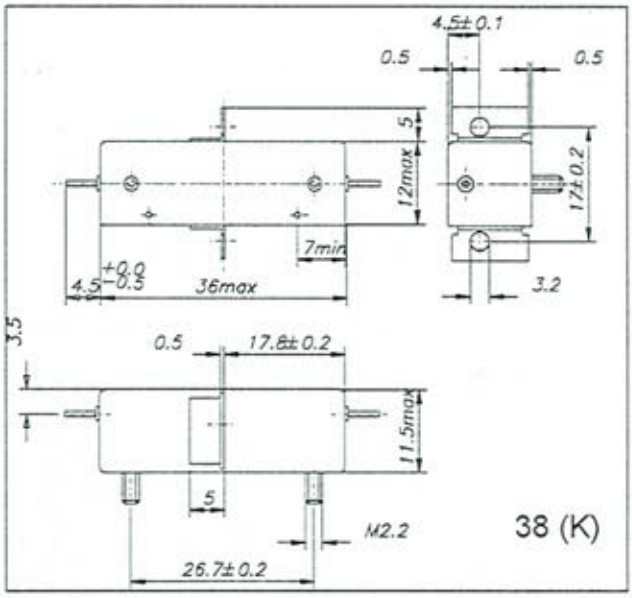

38 (K)

CRYSTAL FILTERS OUTLINES

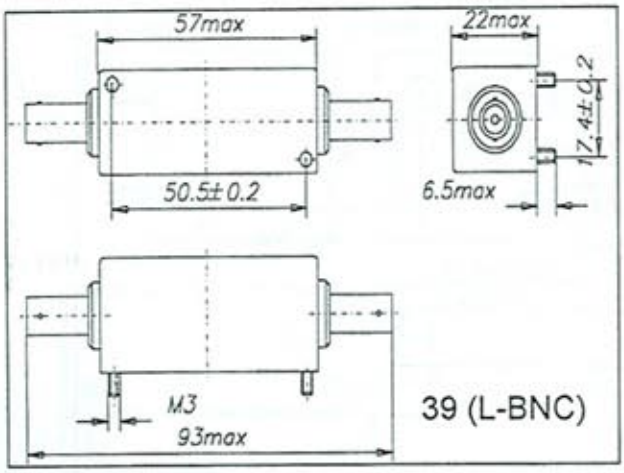

39 (L-BNC)

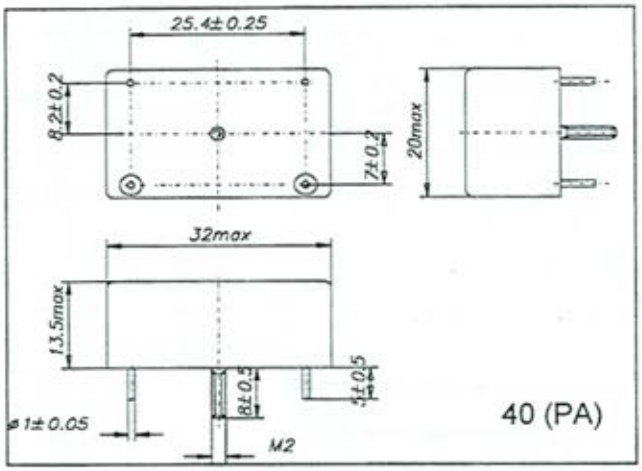

40 (PA)

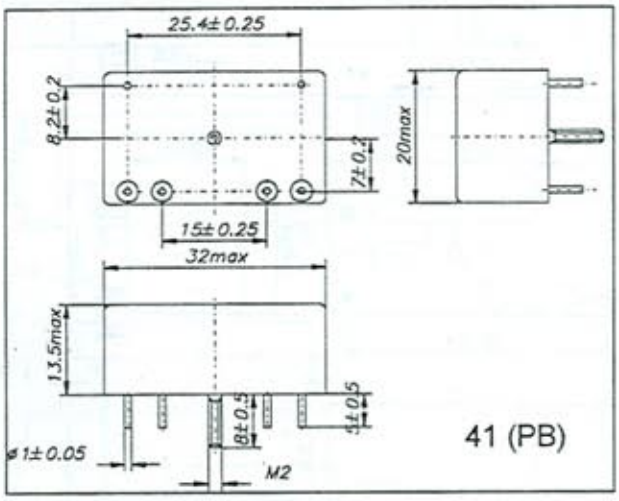

41 (PB)

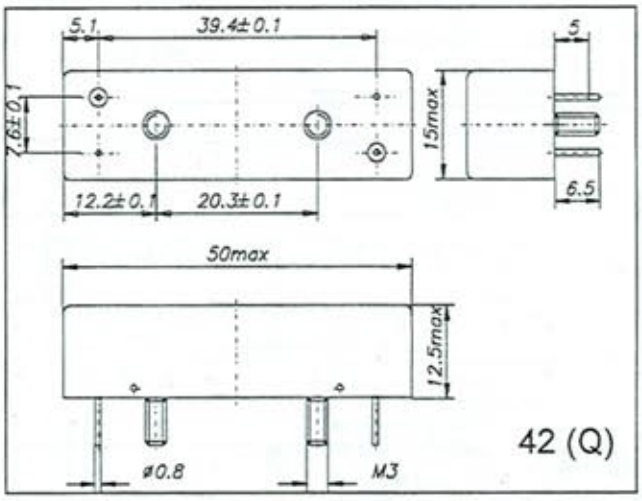

42 (Q)

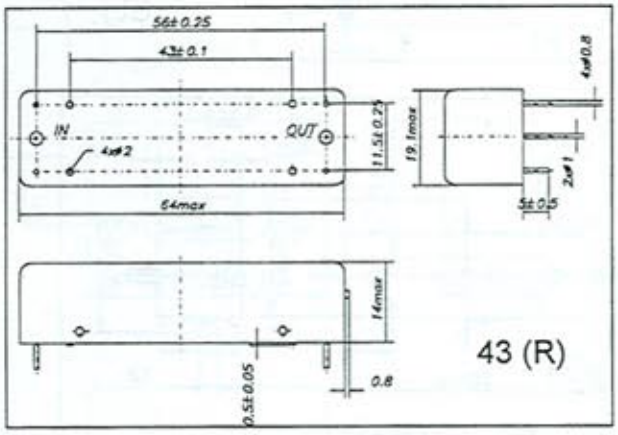

43 (R)

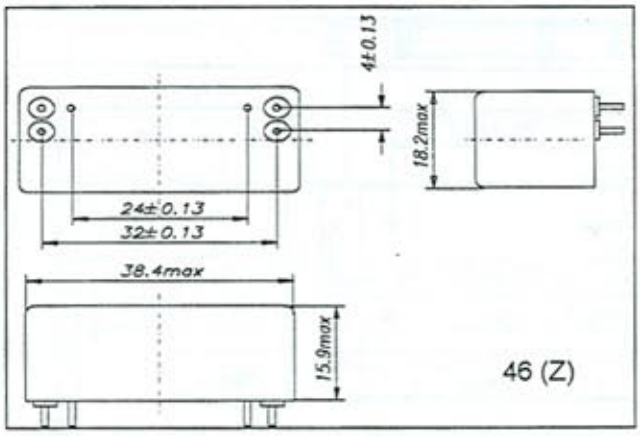

46 (Z)

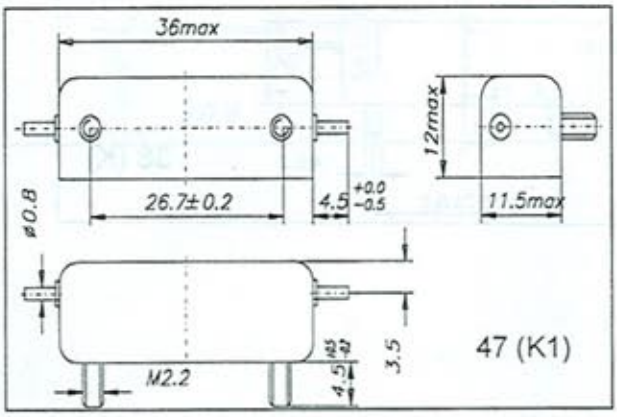

47 (K1)

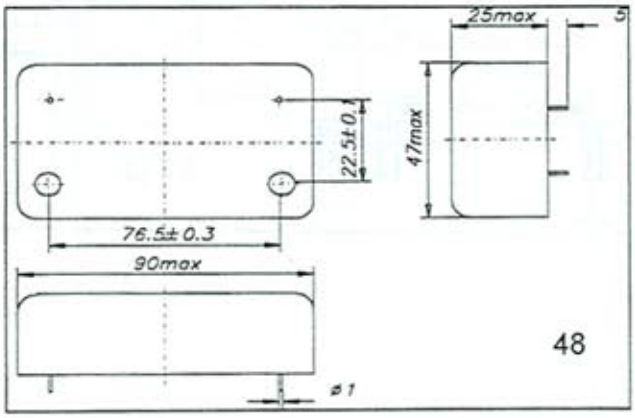

48
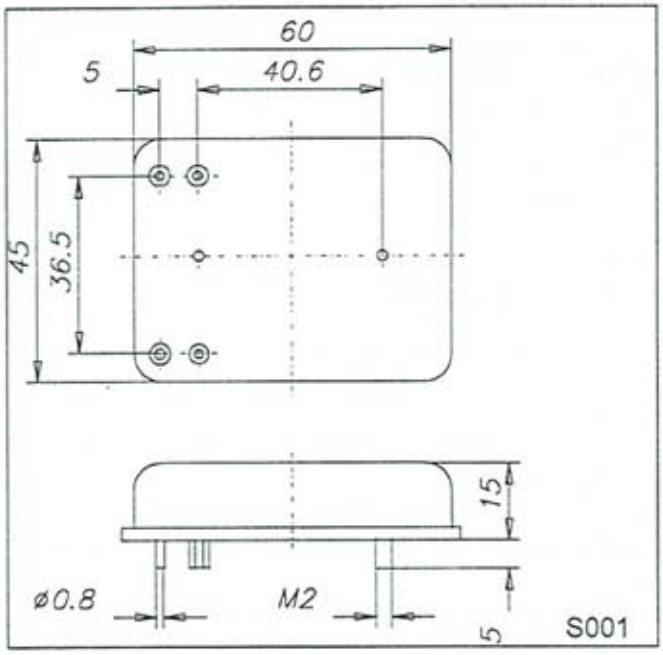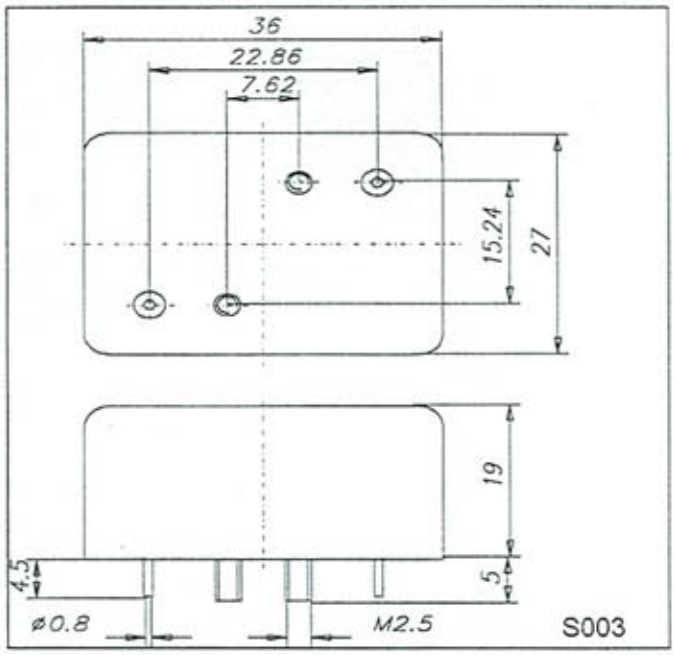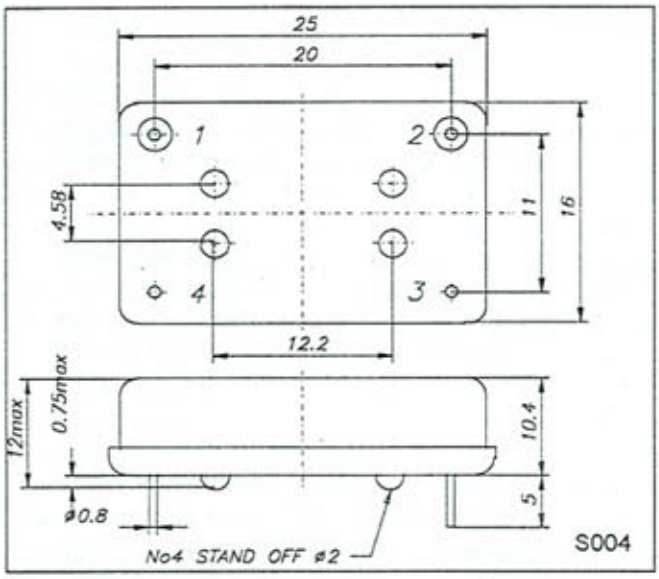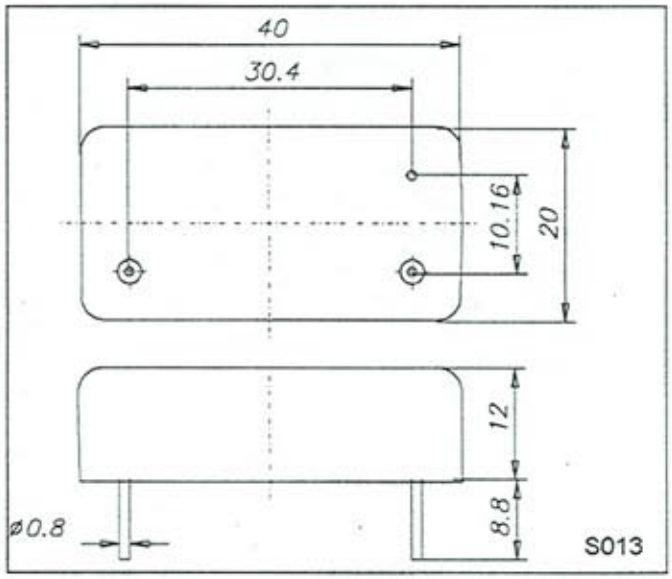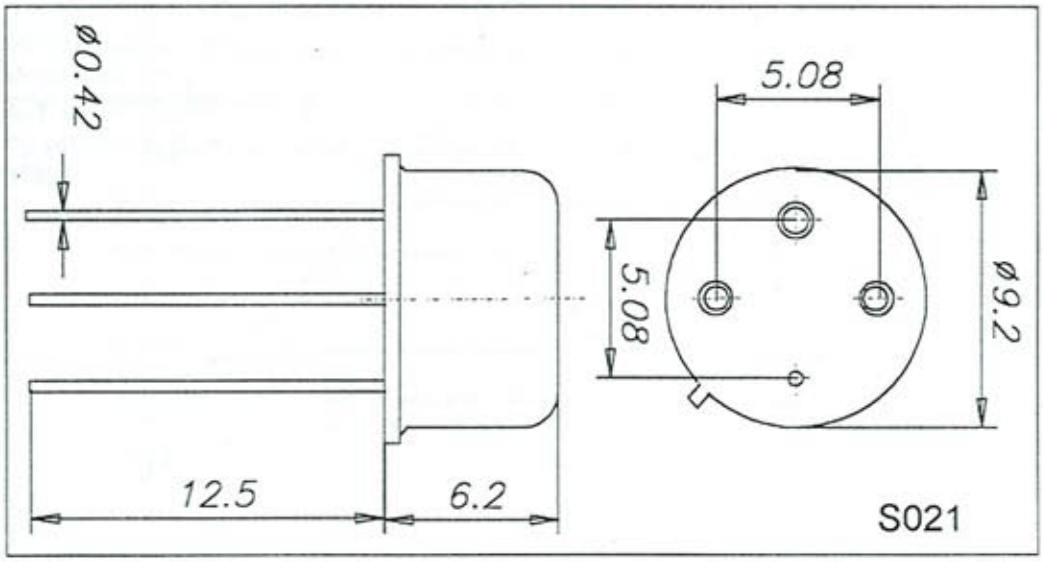
CRYSTAL FILTERS OUTLINES