PSPICE Simulation of Two-Mass Vibratory Conveying System with Electromagnetic Drive

Zeljko V.Despotovic, *Member, IEEE* , Zoran V.Stojiljkovic

***Abstract* — Simulation model of two-mass vibratory conveying system (VCS) with electromagnetic vibratory actuator (EVA) is presented in this paper. The model is set out on the basis of EVA and VCS conventional constructions, known in practice. The simulation model is created on the application program PSPICE. By use of the simulation model, there is presented an analysis of vibratory conveying system behavior, which is operating in the stationary state conditions. This generated model can be applied as an integral part of the simulation circuits of the power converters with phase and switch mode control, for driving vibratory actuator.**

***Keywords* — Actuators, conveyors, phase control, simulation circuit, switching converter, thyristor converter**.

I. Introduction

THE vibratory movements represent the most efficient way for granular and lump materials conveying. This is useful in various technological processes for conveying and finishing materials. The most representative mechanisms for vibratory conveying are the vibratory conveyors. Conveying process is based on a sequential throw movement of particles. Vibrations of tank, i.e. of a *"load-carrying element"* (LCE), in which the material is placed, induces the movement of material particles, so that they resemble to a highly viscous liquid and the material becomes easier for conveying.

Due influences of many factors, process of conveyance by vibration of granular loads is very complicated. The studies of physical process characteristics and establishment of conveyance speed dependence from parameters of the oscillating regime are exposed in [1], [2]. The conveying material flow directly depends on the average value of particles micro-throw, on a certain LCE working vibration frequency. This average value, on the other hand, depends on *vibratory width* i.e. *"peak to peak"* amplitude oscillation, of the LCE. Optimal transport is determinate by drive type. It is within frequency range 5Hz – 120 Hz and vibratory width range 0.1mm – 20mm, for the most of materials [2], [3]. When a reciprocating motion has to be electrically produced, the use of a rotary electric motor, with a suitable transmission is really a rather roundabout way of solving the problem [4]. It is generally a better solution to look for an incremental-motion system with magnetic coupling, so-called *"electromagnetic vibratory actuator"* (EVA), which produces a direct "*to-and-from"* movement.

Electromagnetic drives offer easy and simple control for the mass flow conveying materials. The absence of wearing mechanical part, such as gears, cam belts, bearings, eccentrics or motors, make vibratory conveyors as most economical equipment [5].

Application of electromagnetic vibratory drive in combination with power converter provides flexibility during work. It is possible to provide operation of VCS in the region of the mechanical resonance. Resonance is highly efficient, because large output displacement is provided by small input power. On this way, the whole conveying system has a behavior of the controllable mechanical oscillator [6], [7].

Previously mentioned facts were motivation for mathematical model formulation and creation of electromagnetic vibratory conveying drive simulation model. The simulation model and results are given in the program package PSPICE.

II. Types of Vibratory Conveying Systems

Electromagnetic VCS are divided into two types: single-drive and multi-drive. The single-drive systems can be one-, two- and three-mass; the multiple-drive systems can be one-or multiple-mass as shown in Fig. 1.

Description of one-mass system is shown in Fig. 1 (a). It comprises following elements: *LCE*, with which the *active section* of the EVA is connected, *elastic element*, connecting the active section with the *reactive section,* having been fastened on the frame.

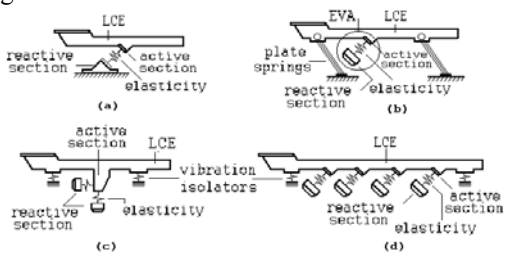

Fig. 1. VCS with electromagnetic drives

The main components of the two-mass systems are shown in Fig. 1(b): *LCE*, to which the active section of EVA is attached, comprising *active section* and *reactive section*, with built-in *elastic connection*. The vibratory machine base is separated from the load-carrying structure by means of *plate springs*.

This research was done as a part of research project supported by Serbian Ministry of Science under grant 006610.

Z.V.Despotovic is with the Mihajlo Pupin Institute, Volgina 15, 11050 Belgrade, Serbia & Montenegro (phone: 381-11-2771-024; fax: 381-11-2776-583; e-mail: zeljko@robot.imp.bg.ac.yu

Z.V. Stojiljkovic is with the School of Electrical Engineering, University of Belgrade, Bulevar kralja Aleksandra 73, 11120 Belgrade, Serbia & Montenegro; (e-mail: zorans@galeb.etf.bg.ac.yu).

A special drive, comprising two identical actuators, which oscillate in mutually perpendicular directions like in Fig. 1(c), is used for elliptical oscillation. The multiple-drive multiple-mass system as shown in Fig.1 (d), has a *LCE* on which a number of identical actuators with *elastic connections* are tied.

III. Mathematical Model of EVA

All main types of vibratory actuators can be considered as single- or double-stroke construction. Fig. 2 (with detailed presentation) shows the most common, single-stroke constructions. There is an electromagnet, whose armature is attracted in one direction, while the reverse stroke is completed by restoring elastic forces.

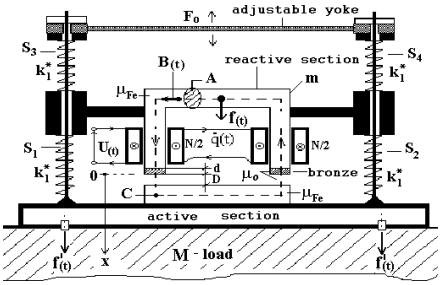

Fig. 2. Construction of the conventional EVA

Mathematical model of EVA, exposed in [8], is based on presentation from Fig. 2. Electromagnet is energized from an AC source. Reactive section is mounted on elastic system of springs. During each half period when the maximum value of the current is reached the armature is attracted, and at a small current value it is repelled as result of the restoring elastic forces in springs. Therefore, vibratory frequency is double frequency of the power supply. These reactive vibrators can also operate on interrupted pulsating (DC) current. Their frequency in this case depends on the pulse frequency of the DC. Mechanical force, which is consequence of this current and created by electromechanical conversion in EVA, is transmitted through the springs to the LCE.

Dynamic differential equations for motion of the EVA are described in definitely form [8]:

$$m\ddot{x} + \beta \cdot \dot{x} + k \cdot x = \frac{a \cdot i^2}{(D + d - x)^2} \qquad (1)$$

$$\frac{2a}{D + d - x} \cdot \frac{di}{dt} + (R_s + R_c)i + \frac{2a \cdot i \cdot \dot{x}}{(D + d - x)^2} = u(t) \qquad (2)$$

The first term is voltage that has been induced from current change in the circuit of the coil. Inductance of the circuit is the function of the inductor's position. The second term presents voltage drop on the equivalent resistance. The third term is, in fact, induced electromotive force, which is a consequence of exertion of the mechanical sub-system on the electromagnetic sub-system.

IV. Mathematical Model of The VCS

Description of one type of two-mass electromagnetic vibratory conveyor is shown in Fig. 3. Flexible elements, by which the LCE with material is supported, are composed of several leaf springs i.e. plate springs. These elements are rigidly connected with the LCE on their one side; while on the other side, they are fitted to the base of the machine and sloped down under define angle.

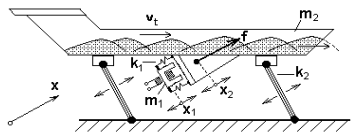

Fig. 3. Two-mass vibratory conveyor with plate springs

Referent direction of *x*-axis is normal to direction of the flexible elements. We will assume that oscillations are made under exciting electromagnetic force *f(t)* in x-direction. The system is started with oscillations from the static equilibrium state in which the already exists between gravitational and spring forces. From above assumption, this construction is a system with two degrees of freedom, which is shown in Fig. 4.

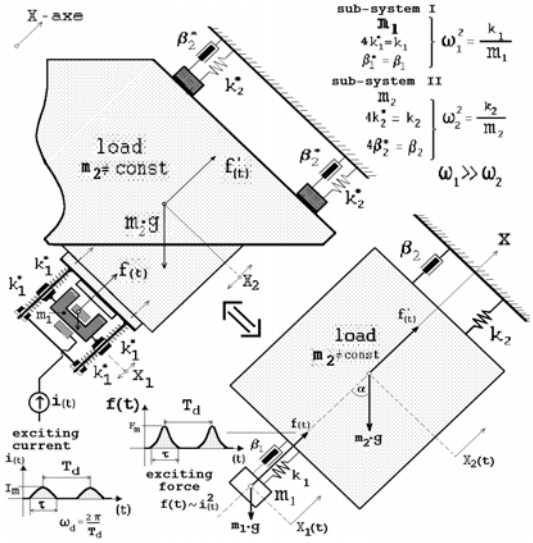

Fig. 4. Model of the VCS for analysis

Model will be analyzed in a way that the mass of EVA reactive section is presented by m_1, while mass m_2 constitutes a sum of masses (LCE, conveying material and the active section of EVA). The mass m_2 is a variable parameter within the system, because mass of the conveying material is varied under real conditions. Displacements of both masses m_1 and m_2 within an oscillatory system are described as x_1 and x_2, respectively.

Equivalent stiffness of springs within EVA is denoted as k_1, while equivalent stiffness of plate springs is denoted as k_2. Coefficient β_1 describes mechanical losses and damping of the reactive part in EVA, while β_2 is equivalent damping coefficient within transporting system (LCE with material). In order to achieve dynamic model of this system, we will divide the system into two sub-systems, shown in Fig. 5.

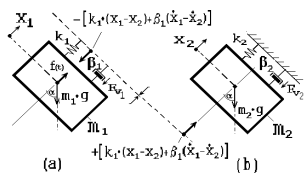

Fig. 5. Simplification of the VCS

We observe mass m_1 and its affect on the rest of the system by force $-\beta_1 \cdot (\dot{x}_1 - \dot{x}_2) - k_1 \cdot [(x_1 - x_{10}) - (x_2 - x_{20})]$, like in

Fig. 5(a). Differential equation in this case is formulated as:

$$m_1(\ddot{x}_1 - g\cos\alpha) = -\beta_1(\dot{x}_1 - \dot{x}_2) - k_1[(x_1 - x_{10}) - (x_2 - x_{20})] + f(t). \quad (3)$$

In the state of static equilibrium:

$m_1 g \cdot \cos\alpha = k_1 \cdot x_{20} - k_1 \cdot x_{10}$, $\dot{x}_1(0) - \dot{x}_2(0) = 0$, $f(0) = 0$, so equation (3) becomes:

$$m_1\ddot{x}_1 = -\beta_1\dot{x}_1 - k_1 \cdot x_1 + k_1 \cdot x_2 + f(t). \quad (4)$$

We observe mass m_2 and its affect on the rest of the system with force, $\beta_1 \cdot (\dot{x}_1 - \dot{x}_2) + k_1 \cdot [(x_1 - x_{10}) - (x_2 - x_{20})]$, like in Fig. 5(b). Differential equation in this case is described as:

$$m_2(\ddot{x}_2 - g\cos\alpha) = -\beta_2\dot{x}_2 - k_2(x_2 - x_{20}) + k_1[x_1 - x_{10} - (x_2 - x_{20})] + \beta_1(\dot{x}_1 - \dot{x}_2) \quad (5)$$

In the state of equilibrium, $-m_2 g \cdot \cos\alpha = (k_2 + k_1) \cdot x_{20} - k_1 \cdot x_{10}$ and $\dot{x}_1(0) - \dot{x}_2(0) = 0$, so the above equation becomes:

$$m_2\ddot{x}_2 = -\beta_2\dot{x}_2 - k_2x_2 + k_1x_1 - k_1x_2 + \beta_1 \cdot (\dot{x}_1 - \dot{x}_2) \quad (6)$$

From electrical equation (1) for EVA (by substituting $x \to x_1 - x_2$; $\dot{x} \to \dot{x}_1 - \dot{x}_2$) and from derived equations (4) and (6), which are related to previously presented model of the conveying drive, we conclude that dynamical equations of the VCS in their final form are:

$$m_1\ddot{x}_1 + \beta_1 \cdot (\dot{x}_1 - \dot{x}_2) + k_1 \cdot (x_1 - x_2) = f(t) \quad (7)$$

$$m_2\ddot{x}_2 + \beta_2\dot{x}_2 + (k_1 + k_2)x_2 - k_1x_1 - \beta_1 \cdot (\dot{x}_1 - \dot{x}_2) = 0 \quad (8)$$

$$\frac{2a}{D + d - (x_1 - x_2)} \cdot \frac{di}{dt} + (R_s + R_c)i + \frac{2a \cdot i \cdot (\dot{x}_1 - \dot{x}_2)}{[D + d - (x_1 - x_2)]^2} = u(t) \quad (9)$$

$$f(t) = \frac{a \cdot \dot{q}^2}{[D + d - (x_1 - x_2)]^2} \quad (10)$$

$$\dot{q} = i \quad (11)$$

The whole system is described by three differential equations. Differential equations (7) and (8) describe mechanical behavior of the system under time-variable exciting electromagnetic force $f(t)$, which is a consequence of coil current $i(t)$. The third equation is (9), for coil electrical equilibrium.

V. Simulation Circuit

Simulation circuit of VCS is created on the basis of previously derived differential equations. Functional diagram is shown in Fig. 6, upon which the simulation model is based. Mechanical quantities are shown with equivalent electric quantities according table of electromechanical analogs for inverse system [9].

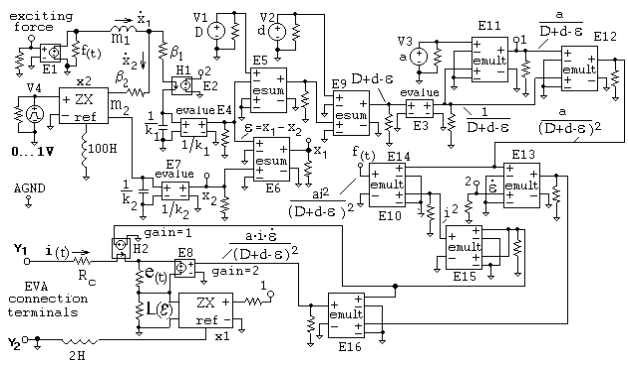

Fig. 6. Simulation circuit of VCS

Simulation model is generated in PSPICE and sub-circuit is formed for application within different simulation schemes, when analyzing various types of power converters for electromagnetic vibratory drive.

VI. Simulation Results

This section represents simulation results for cases of phase angle control and switch-mode current control. We have taken parameters of the actuator and vibratory system, which are usually occur in practice. Electrical and mechanical parameters of EVA are given in Table I. Mechanical parameters of the conveyor are given in Table II.

TABLE I
EVA PARAMETERS USED IN THE SIMULATIONS

electrical	mechanical
R_c = 4,8 Ω	D = 8 mm
L(x=0) = 175 mH	d = 1 mm
	m_1 = 0,5 kg
a = 8·10^{-3} Am	k_1 = 4·7,5 kN/mm
	β_1 = 4·25 mN/m/s

TABLE II
VIBRATORY CONVEYOR PARAMETERS USED IN THE SIMULATIONS

m_2 = 0...150 kg
k_2 = 4·2,5 kN/mm
β_2 = 4·300 N/m/s

Load mass, which is oscillating, is m_2=98,5kg, so that the mechanical natural frequency f_{res} of the system is equal to mains (AC source) frequency f=50Hz.

A. Phase control

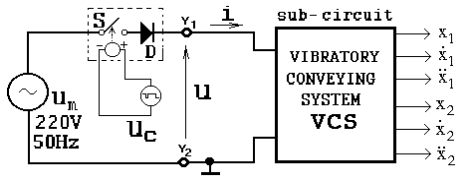

Fig. 7. Simulation scheme of power converter with phase control

Simulation circuit with phase angle control of EVA coil is given in Fig. 7. Power thyristor is simulated as voltage-controlled switch *S,* with diode *D* in series. Conducting moment of the switch *S* is determined by control voltage, synchronized with the moment of mains voltage zero-cross and phase shifted for angle α.

Simulation results for phase angles α.=126° and α.=54° are shown in Fig.8(a) and Fig.8(b), respectively.

Characteristic values are: mains voltage-u_m, control voltage-u_c, coil voltage-u, coil current–I and LCE displacement-x_2.

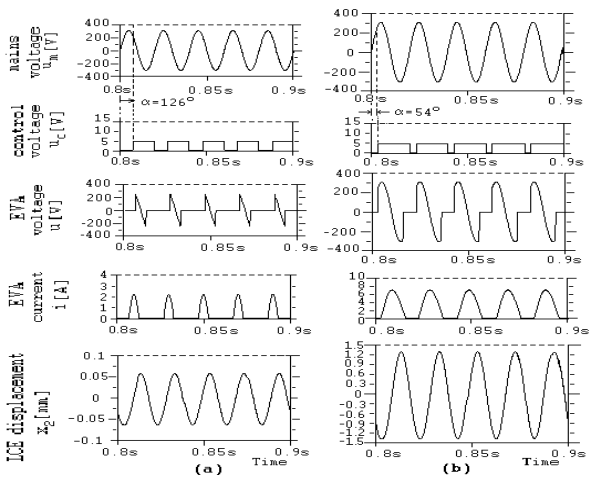

Fig. 8. Characteristic waveforms in case of phase control

B. Switch-mode control

From electrical standpoint, EVA is mostly inductive load by its nature, so generation of the sinusoidal half-wave current is possible by switching converter with current-mode control.

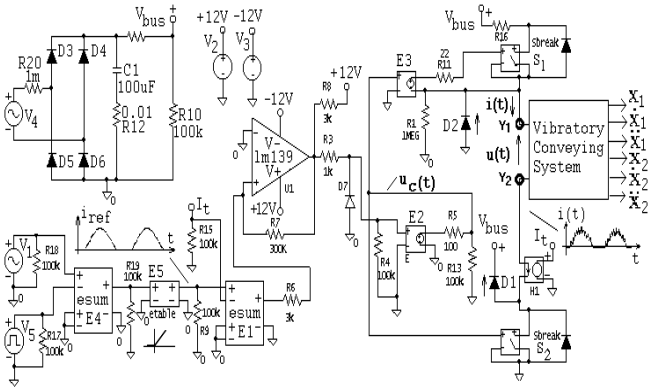

Fig.9. Simulation scheme of power converter with switching control

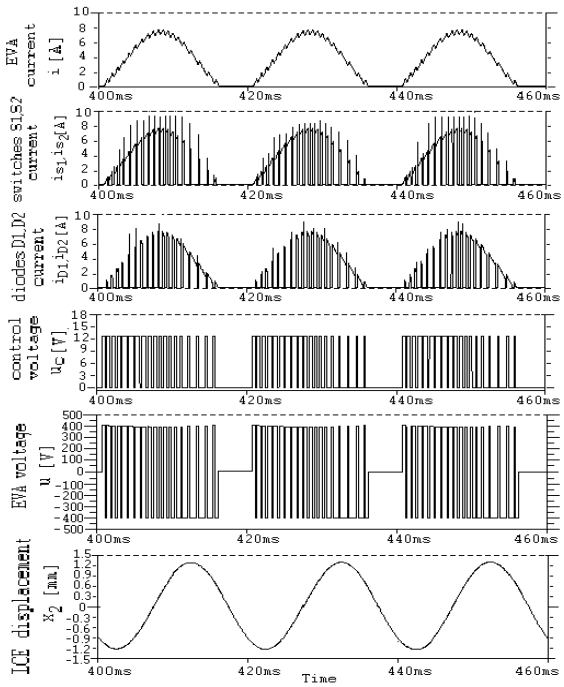

Fig.10. Characteristic wave forms in case of switching control

The usage of asymmetric half-bridge (dual forward converter), like in Fig. 9, is one possible solution. EVA is driven from sinusoidal half-wave current, attained from tracking the reference sine half- wave with f_d=50Hz. It has been simply realized with comparator tolerance band i.e. hysteresis (*"bang-bang"*) controller. Reference current was compared with actual current with the tolerance band around the reference current. That means, that we have current feedback with an error signal on the controller input. Half-bridge supply voltage-bus is $V_{bus}=+380VDC$. Switches S_1 and S_2 are modeled as in case of phase angle control. Current gain feedback is adjusted to $K_i = 1.3$. Characteristic simulation waveforms are shown in Fig. 10. Observed variables are: coil current-i, switches current i_{S1}, i_{S2}, free-willing diodes current i_{D1}, i_{D2}, switches control voltage u_c, coil voltage- u and LCE displacement- x_2.

EVA current waveform is very similar to the case with phase control. The only difference is in current high-frequency ripple due to the hysteresis control, which is in case of switching drive.

VIII. Conclusion

In scope of simulation and experimental results, one can conclude that in case of thyristor converter, with phase control, LCE displacement has *"smooth"* sine characteristic, although EVA current is pulsating. Also, change of vibratory width is due to change of phase angle. By decrease of phase angle, the effective voltage and coil current increase. This is caused by increase of the oscillation amplitude of LCE too, which is created by stronger impulse of exciting force. In opposite, increase of phase angle, cause decrease of the amplitude oscillation.

Usage of thyristor converters with phase control implies constant vibratory frequency, which is imposed by supply mains. Serious problem can appear due to change of conveying material mass even due to change of parameters of the supporting springs.

Switching converters can exceed these disadvantages. In transistor switching converter with tolerance band current control, EVA current is independent of mains frequency. EVA current waveform is very similar to the case with phase control. The only difference is in current high-frequency ripple due to the hysteresis control. Drive current ripple doesn't affect LCE oscillation waveform, since sine wave of displacement is *"smooth"*, like that of the thyristor drive.

References

[1] I.F. Goncharevich, K.V. Frolov, and E.I.Rivin, *Theory of vibratory technology,* Hemisphere Publishing Corporation, New York, 1990, pp. 213-269.

[2] E.M. Slot and N.P Kruyt, "Theoretical and experimental study of the transport of granular materials by inclined vibratory conveyors", *Powder Technology*, 87(3), 1996, pp.203-210.

[3] M.A. Parameswaran and S.Ganapahy, "Vibratory Conveying-Analysis and Design: A Review", *Mechanism and Machine Theory*, Vol.14, No. 2, April 1979, pp. 89-97.

[4] E.H. Werninck, *"Electric Motor Handbook",* McGraw-HILL Book Company (UK) Limited, 1978, pp. 330-333.

[5] M.Joshi, "Performance Monitoring System for Electromagnetic Vibrating Feeders of Coal Handling Plant", *Plant Maintenance Resource Center, M-News Edition 27*, Technical paper at web site: www.plant-maintenance.com/articles/Feeder_Performance_Monitoring.pdf, July 2002.

[6] T. Doi, K.Yoshida, Y.Tamai, K.Kono, K.Naito, and T.Ono, "Feedback Control for Vibratory Feeder of Electromagnetic Type", *Proc. ICAM'98*, 1998, pp. 849-854.

[7] T. Doi, K.Yoshida, Y.Tamai, K.Kono, K.Naito, and T.Ono, "Modeling and Feedback Control for Vibratory Feeder of Electromagnetic Type", *Journal of Robotics and Mechatronics*, Vol.11, No.5, June 1999, pp. 563-572.

[8] Z. Despotovic, "Matematical model of electromagnetic vibratory actuator", PROCEEDINGS (Vol.T3-3.2, pp 1-5) of the XII International Symposium of the Power Electronics, N. Sad 5-7. XI 2003.

[9] S. Seely, "*Electromechanical energy conversion",* McGraw-HILL Book Company INC., New York, 1962, pp.73-106.